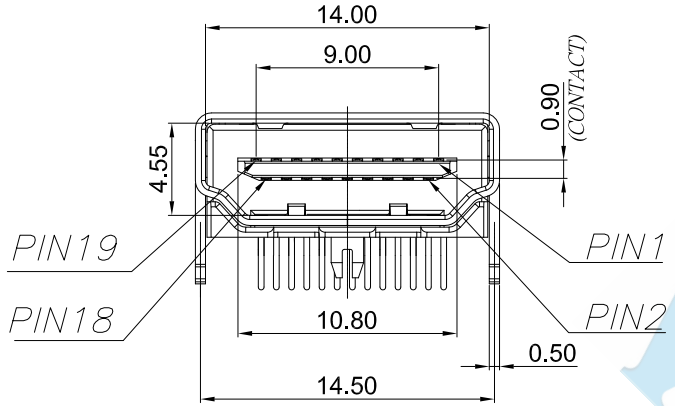

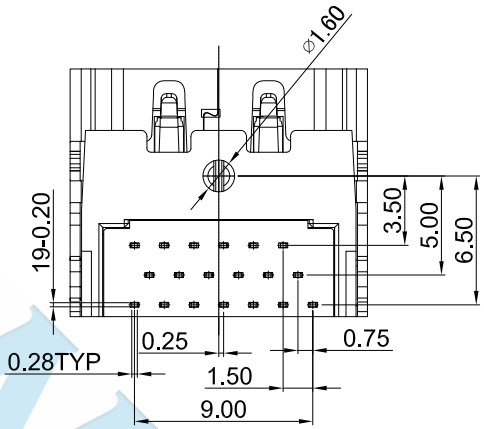

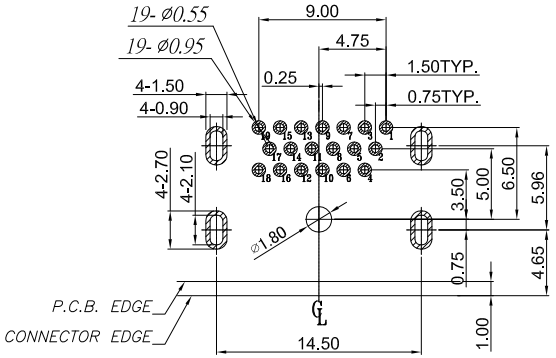

RECOMMENDED P.C.B. LAYOUT
TOP VIEW

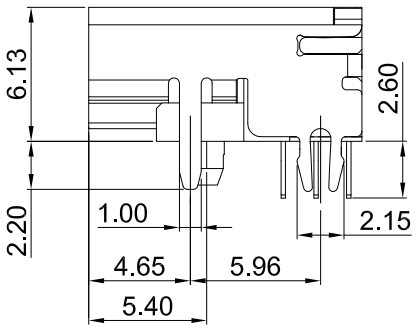

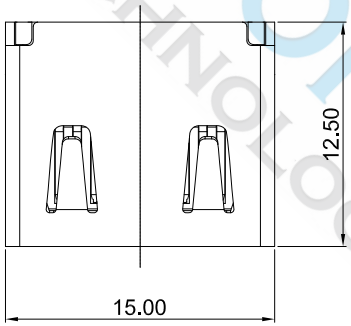

NOTE:

1.MATERIAL:

1.1 HOUSING: LCP

1.2 CONTACT: BRASS

1.3 SHEEL: BRASS

2.PLATING :

2.1 CONTACT: PLATED GOLD IN MATING AREA ;
TIN PLATED ON SOLDER BALLS ;
NICKEL UNDER PLATED OVERALL

2.2 SHELL: NICKEL UNDER PLATED SURFACE LAYER

3.ELECTRICAL:

3.1 RATING: 40V , 0.5A

3.2 CONTACT RESISTANCE: 30 mΩ Max

3.3 INSULATION RESISTANCE: 100MΩ Min

3.4 DIELECTRIC WITHSTANDING VOLTAGE: 500V AC / minute

3.5 OPERATING TEMPERATURE: -25˚C~ 85˚C

WISCONN TECHNOLOGY

DIMENSIONS TOLERANCE METRIC															
Up to 5 ±0.2	UNITS	MM	FINISH	SEE NOTE	CH'K	Calvin	DRAW NAME		WISCONN Technology Co.,Ltd						
Above 05~15 ±0.3							HDMI 19PIN DIP TYPE(Three Row)								
Above 15~30 ±0.4	QT'Y	N/A	DRAW	Johnson	APP'D	Selena	PART NUMBER	WHDM-1915LB3DR	Tel:+886-2-2790-1979 Fax:+886-2-2790-1569						
Above 30~50 ±0.5							DRAW NUMBER	T002							
Angle ±0.3°	MT'L	SEE NOTE	DE'N	Mike	DATE	November . 29 . 2023	FILE NAME .DWG		SCALE	1/1	SIZE	A4	SHEET	1	REV. A